UPDATED

DSDM
Submersible Motor


DSDM4 DSDM6

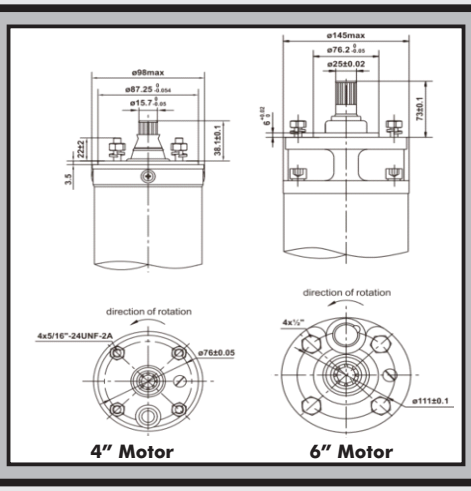

4" Motor 6" Motor

DAYLIFF DSM submersible motors are specifically designed to give exceptional reliability and efficiency in all borehole pumping applications. Features include:-

- 4/6" standard oil filled type motor with FDA approved colourless oil
- 6" Water cooled canned type motor with resin filled stator for extended motor life also available
- Largely stainless steel AISI 304 construction with cast iron top and bottom bearing housings
- Water lubricated thrust and radial bearings
- Reinforced netted Nylon diaphragm for internal motor pressure compensation
- Thermal overload for motor protection
- Standard NEMA flanges for use with all types of pumps

Protection: IP68 ***Insulation Class:*** F ***Speed:***2850rpm ***Voltage:*** 1x220V/240V,50Hz/ 3x380V/415V, 50Hz

OPERATING PARAMETERS

Max Voltage Variation: ±10%
Max Starts/Hr: 20
Max Water Temperature: 35°C
Min Water Pass Flow Rate: 0.2m/sec
Max Immersion Depth: 200m-4" and 300m-6"
Installation: Vertical/horizontal with a tilt angle >50

MOTOR DATA

SINGLE PHASE

Power		In (A)	Istart (A)	Eff (%)	PF CosØ	Thrust Load (N)	Tail Cable		H (mm)	Weight (Kg)
kW	HP						mm²	m		
0.37	0.5	3.5	14	57	0.93	1500	0.63	1.3	385.5	7
0.55	0.75	5.0	20	60			0.75	1.5	410.5	8
0.75	1	5.7	23	63			1.0	1.7	430.5	9
1.1	1.5	7.9	32	66			1.3	1.8	475.5	11
1.5	2	10.5	42	68			1.5	2.0	535.5	15
2.2	3	16.2	65	69			2.0	2.4	625.5	19

THREE PHASE

Power		In (A)	Istart (A)	Eff (%)	PF (CosØ)	Thrust Load(N)	Tail Cable		H (mm)	Weight (Kg)
kW	HP						mm²	m		
2.2	3	6.1	43	71	0.80	1500	1.5	2.4	515.5	17
3	4	7.3	51	72	0.81	3000	2.0	2.8	632	19
4	5.5	9.5	67	74	0.82	4800			736.5	23
5.5	7.5	12.2	85	75	0.83		2.5	3.2	826.5	28
7.5	10	14.6	102	76	0.84				758	45
5.5	7.5	13/*14	85/*96	77	0.80	6500	3.0	2.5	732/*758	43/*45
7.5	10	17	121/*118		0.81	10000	4.0	2.8	807/*818	48/*50
9.2	12.5	22.3	156						872	53
11	15	25	179/*170	78	0.82	11000	5.0	3.0	932/*930	58/*66
13	17.5	30	210						982	66
15	20	33	230	79	0.83		6.0	3.5	1062	70
18.5	25	44	308				4.0*2		1077	88
22	30	54	378	80					1152	97
26	35	58	406		0.84		5.0*2	4.0	1227	105
30	40	62	434	81					1302	113

* Water Cooled Motors

MATERIAL SPECIFICATION

Component	Material
Motor shell	304 stainless steel
Sand guard	NBR
Cable connector	4"-EPDM, 6"-XLPE
Upper end bracket cover	4"-304 stainless steel, 6"-Cast Iron
Upper end bracket	Zinc plated cast iron
Mechanical Seal	Graphite/Ceramic
Shaft	4"-304 stainless steel, 6"-AISI 420
Winding	Copper
Lower end bracket	4"-Reinforced Plastic 6"-Cast Iron
Lower end bracket cover	4"-304 stainless steel, 6"-Cast Iron
Diaphragm	NBR

D&S DAVIS & SHIRTLIFF